19-2756; Rev 1; 4/03

MAXIM

±80V Fault-Protected, Fail-Safe, 1/4-Unit Load, +3.3V RS-485 Transceiver

General Description

The MAX3430 fault-protected RS-485 transceiver features ±80V protection from overvoltage signal faults on communication bus lines. Each device contains one driver and one receiver, and the output pins can withstand faults, with respect to ground, of up to ±80V. Even if the faults occur when the transceiver is active, shut down, or powered off, the device will not be damaged. The MAX3430 operates from a 3.3V supply and features a slew-rate-limited driver that minimizes EMI and reduces reflections caused by improperly terminated cables, allowing error-free data transmission at data rates up to 250kbps. The MAX3430 has a 1/4-unit-load receiver input impedance allowing up to 128 transceivers on a single bus and features fail-safe circuitry, which guarantees a logic-high receiver output when the receiver inputs are open.

Hot-swap circuitry eliminates false transitions on the data cable during circuit initialization or connection to a live backplane. Short-circuit current limiting and thermal-shutdown circuitry protect the driver against excessive power dissipation.

The MAX3430 is available in 8-pin SO and 8-pin PDIP packages, and is specified over commercial and industrial temperature ranges.

Applications

RS-422/RS-485 Communications

Lighting Systems

Industrial-Control Local Area Networks

Profibus Applications

Multimaster RS-485 Networks

Features

- ♦ **±80V Fault Protection**
- ♦ **±12kV ESD Protection**
- ♦ **+3.3V Operation**
- ♦ **Internal Slew-Rate Limiting**
- ♦ **250kbps Data Rate**
- ♦ **Allows Up to 128 Transceivers on the Bus**
- ♦ **-7V to +12V Common-Mode Input Voltage Range**
- ♦ **True Fail-Safe Inputs**
- ♦ **Hot-Swap Input Structure on DE**
- ♦ **Available in 8-Pin SO and PDIP Packages**

Ordering Information

PART	TEMP RANGE	PIN-PACKAGE
MAX3430CPA	0°C to +70°C	8 Plastic DIP
MAX3430CSA	0°C to +70°C	8 SO
MAX3430EPA	-40°C to +85°C	8 Plastic DIP
MAX3430ESA	-40°C to +85°C	8 SO

Pin Configuration and Typical Operating Circuit

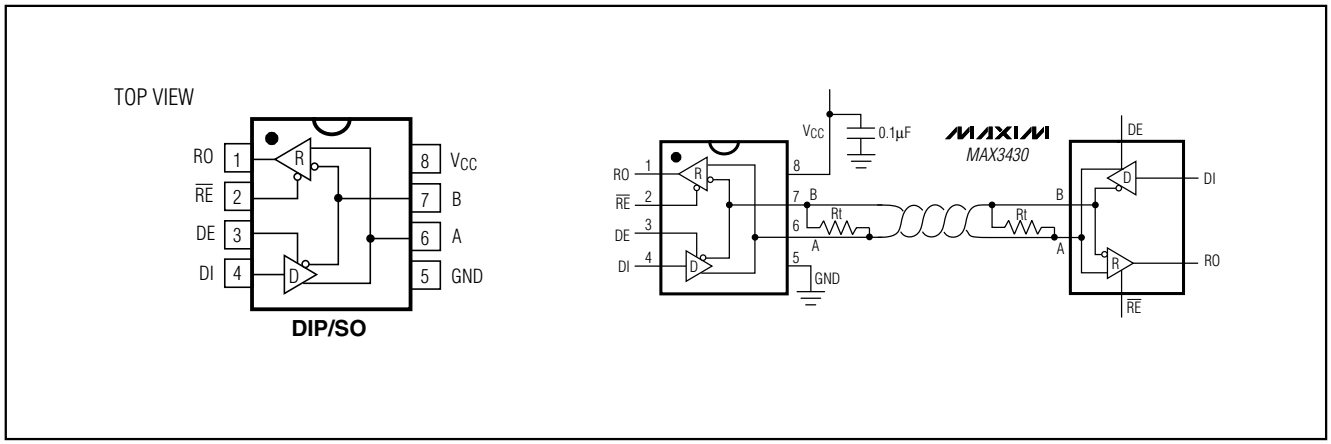

For pricing, delivery, and ordering information, please contact Maxim/Dallas Direct! at 1-888-629-4642, or visit Maxim's website at www.maxim-ic.com.

±80V Fault-Protected, Fail-Safe, 1/4-Unit Load, +3.3V RS-485 Transceiver

ABSOLUTE MAXIMUM RATINGS

(All voltages are referenced to GND.)
V_{CC} .....+5V
$\overline{RE}$, DE, DI.....-0.3V to (V_{CC} + 0.3V)
Driver Output Voltage (A, B) (Note 1).....±80V
Receiver Input Voltage (A, B) (Note 1).....±80V
RO .....-0.3V to (V_{CC} + 0.3V)
Continuous Power Dissipation (T_A = +70°C)
8-Pin SO (derate 5.88mW/°C above +70°C).....471mW
8-Pin Plastic DIP (derate 9.09mW/°C above +70°C) ...727mW

Operating Temperature Ranges
MAX3430C_ _ .....0°C to +70°C
MAX3430E_ _ .....-40°C to +85°C
Junction Temperature.....+150°C
Storage Temperature Range.....-65°C to +150°C
Lead Temperature (soldering, 10s).....+300°C

Note 1: A, B must be terminated with 54Ω or 100Ω to guarantee ±80V fault protection.

Stresses beyond those listed under "Absolute Maximum Ratings" may cause permanent damage to the device. These are stress ratings only, and functional operation of the device at these or any other conditions beyond those indicated in the operational sections of the specifications is not implied. Exposure to absolute maximum rating conditions for extended periods may affect device reliability.

DC ELECTRICAL CHARACTERISTICS

(V_{CC} = +3.3V ±10%, T_A = T_{MIN} to T_{MAX}, unless otherwise noted. Typical values are at V_{CC} = +3.3V and T_A = +25°C.)

PARAMETER	SYMBOL	CONDITIONS	MIN	TYP	MAX	UNITS
DRIVER						
Differential Driver Output	V_{OD}	Figure 1, R_L = 100Ω	2.0		V_{CC}	V
		Figure 1, R_L = 54Ω	1.5		V_{CC}	
Change in Magnitude of Differential Output Voltage	ΔV_{OD}	Figure 1, R_L = 100Ω or 54Ω (Note 2)			0.2	V
Driver Common-Mode Output Voltage	V_{OC}	Figure 1, R_L = 100Ω or 54Ω		V_{CC} / 2	3	V
Change in Magnitude of Common-Mode Voltage	ΔV_{OC}	Figure 1, R_L = 100Ω or 54Ω (Note 2)			0.2	V
DRIVER LOGIC						
Driver Input High Voltage	V_{IH}	DI	2.0			V
Driver Input Low Voltage	V_{IL}	DI			0.8	V
Driver Input Current	I_{IN}	DI			±1	µA
Driver Short-Circuit Output Current	I_{OSD}	0 ≤ V_{OUT} ≤ 12V (Note 3)			+250	mA
		-7V ≤ V_{OUT} ≤ V_{CC} (Note 3)	-250			
Driver Short-Circuit Foldback Output Current	I_{OSDF}	(V_{CC} - 1V) ≤ V_{OUT} ≤ 12V (Note 3)	+10			mA
		-7V ≤ V_{OUT} ≤ 1V (Note 3)			-10	
RECEIVER						
Input Current (A, B)	$I_{A, B}$	DE = GND, $\overline{RE}$ = GND, V_{IN} = +12V			250	µA
		DE = GND, $\overline{RE}$ = GND, V_{IN} = -7V			-200	
		V_{IN} = -80V to +80V	-6		+6	mA
Receiver Differential Threshold Voltage	V_{TH}	-7V ≤ V_{CM} ≤ 12V	-200		-50	mV
Receiver Input Hysteresis	ΔV_{TH}	V_A + V_B = 0		25		mV

DC ELECTRICAL CHARACTERISTICS (continued)

(V_{CC} = +3.3V ±10%, T_A = T_{MIN} to T_{MAX}, unless otherwise noted. Typical values are at V_{CC} = +3.3V and T_A = +25°C.)

PARAMETER	SYMBOL	CONDITIONS	MIN	TYP	MAX	UNITS
RECEIVER LOGIC						
RO Output High Voltage	V_{OH}	I_O = -1.6mA	V_{CC} - 0.6			V
RO Output Low Voltage	V_{OL}	I_O = 1mA			0.4	V
Three-State Output Current at Receiver	I_{OZR}	0 ≤ V_O ≤ V_{CC}			± 1	µA
Receiver Input Resistance	R_{IN}	-7V ≤ V_{CM} ≤ 12V	48			kΩ
Receiver Output Short-Circuit Current	I_{OSR}	0 ≤ V_{RO} ≤ V_{CC}			±95	mA
CONTROL						
Control Input High Voltage	V_{CIH}	DE, $\overline{RE}$	2.0			V
Control Input Low Voltage	V_{CIL}	DE, $\overline{RE}$			0.8	V
Input Current DE Current Latch During First DE Rising Edge				80		µA
Input Current $\overline{RE}$ Current Latch During First $\overline{RE}$ Rising Edge				80		µA

PROTECTION SPECIFICATIONS

(V_{CC} = +3.3V ±10%, T_A = T_{MIN} to T_{MAX}, unless otherwise noted. Typical values are at V_{CC} = +3.3V and T_A = +25°C.)

PARAMETER	SYMBOL	CONDITIONS		MIN	TYP	MAX	UNITS
ESD Protection		A, B	Human Body Model		±12		kV
SUPPLY CURRENT							
Supply Current	I_{CC}	No load, $\overline{RE}$ = 0, DE = V_{CC}, DI = 0 or V_{CC}			3.5	10	mA
		No load, $\overline{RE}$ = V_{CC}, DE = V_{CC}, DI = 0 or V_{CC}			3.0	8	
Supply Current in Shutdown Mode	I_{SHDN}	$\overline{RE}$ = V_{CC}, DE = 0				200	µA

±80V Fault-Protected, Fail-Safe, 1/4-Unit Load, +3.3V RS-485 Transceiver

DRIVER SWITCHING CHARACTERISTICS

(V_{CC} = +3.3V ±10%, T_A = T_{MIN} to T_{MAX}, unless otherwise noted. Typical values are at V_{CC} = +3.3V and T_A = +25°C.)

PARAMETER	SYMBOL	CONDITIONS	MIN	TYP	MAX	UNITS
Driver Propagation Delay	t_{DPLH}	Figures 2 and 3, R_L = 54Ω, C_L = 50pF		700	1500	ns
	t_{DPHL}			700	1500	
Driver Differential Output Rise or Fall Time	t_{DR}, t_{DF}	Figures 2 and 3, R_L = 54Ω, C_L = 50pF	250		1200	ns
Differential Driver Output Skew, $\lvert t_{DPLH} - t_{DPHL} \rvert$	t_{DSKEW}	Figures 2 and 3, R_L = 54Ω, C_L = 50pF		150	200	ns
Maximum Data Rate			250			kbps
Driver Enable to Output Low	t_{DZL}	Figure 4, C_L = 50pF			5200	ns
Driver Disable Time from Output Low	t_{DLZ}	Figure 4, C_L = 50pF			1000	ns
Driver Output Enable Time from Shutdown	$t_{DZL(SHDN)}$	Figure 4, C_L = 50pF			8000	ns
Driver Enable to Output High	t_{DZH}	Figure 5, C_L = 50pF			5200	ns
Driver Disable Time from Output High	t_{DHZ}	Figure 5, C_L = 50pF			1000	ns
Driver Output Enable Time from Shutdown	$t_{DZH(SHDN)}$	Figure 5, C_L = 50pF			8000	ns
Driver Time to Shutdown	t_{SHDN}				1000	ns

RECEIVER SWITCHING CHARACTERISTICS

(V_{CC} = +3.3V ±10%, T_A = T_{MIN} to T_{MAX}, unless otherwise noted. Typical values are at V_{CC} = +3.3V and T_A = +25°C.)

PARAMETER	SYMBOL	CONDITIONS	MIN	TYP	MAX	UNITS
Receiver Propagation Delay	t_{RPLH}	Figure 6, C_L = 20pF, V_{ID} = 2V, V_{CM} = 0			120	ns
	t_{RPHL}				120	
Receiver Output Skew, $\lvert t_{RPLH} - t_{RPHL} \rvert$	t_{SKEW}	Figure 6, C_L = 20pF			40	ns
Receiver Enable to Output Low	t_{RZL}	Figure 7, R = 1kΩ, C_L = 20pF			80	ns
Receiver Enable to Output High	t_{RZH}	Figure 7, R = 1kΩ, C_L = 20pF			80	ns
Receiver Disable Time from Low	t_{RLZ}	Figure 7, R = 1kΩ, C_L = 20pF			80	ns
Receiver Disable Time form High	t_{RHZ}	Figure 7, R = 1kΩ , C_L = 20pF			80	ns
Receiver Output Enable Time from Shutdown	$t_{RZH(SHND)}$, $t_{RZL(SHND)}$	Figure 7, R = 1kΩ, C_L = 20pF			5000	ns
Receiver Time to Shutdown	t_{SHDN}				1000	ns

Note 2: ΔV_{OD} and ΔV_{OC} are the changes in V_{OD} and V_{OC}, respectively, when the DI input changes state.

Note 3: The short-circuit output current applies to peak current just prior to foldback current limiting; the short-circuit foldback output current applies during current limiting to allow a recovery from bus contention.

Typical Operating Characteristics

(V_{CC} = +3.3V, T_A = +25°C, unless otherwise noted.)

SUPPLY CURRENT vs. TEMPERATURE

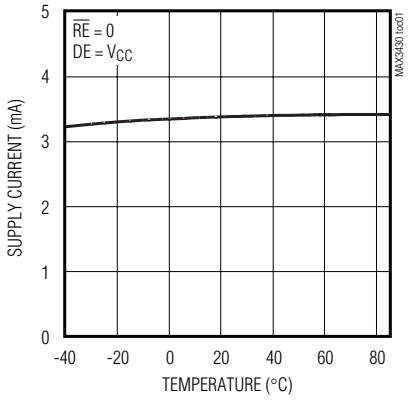

SHUTDOWN CURRENT vs. TEMPERATURE

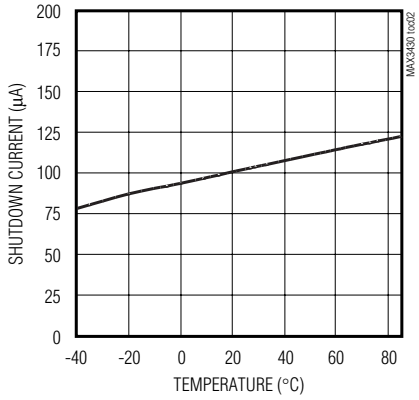

OUTPUT CURRENT vs. RECEIVER OUTPUT LOW VOLTAGE

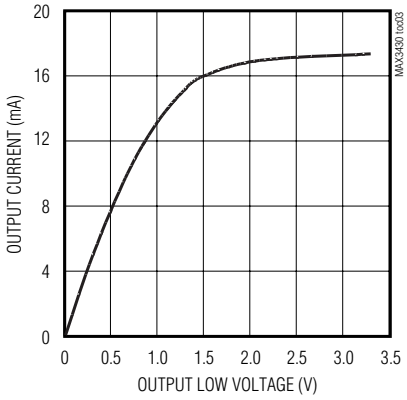

OUTPUT CURRENT vs. RECEIVER OUTPUT HIGH VOLTAGE

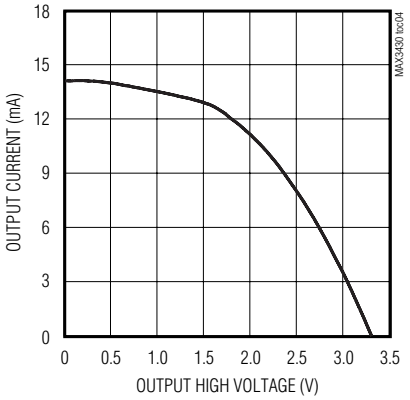

RECEIVER OUTPUT HIGH VOLTAGE vs. TEMPERATURE

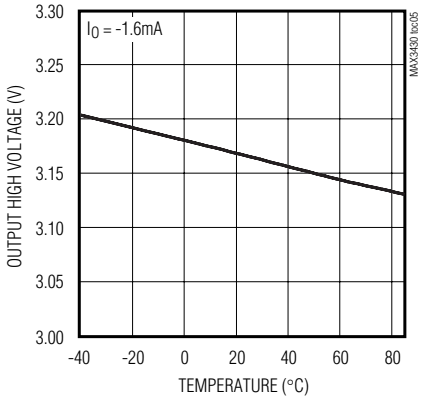

RECEIVER OUTPUT LOW VOLTAGE vs. TEMPERATURE

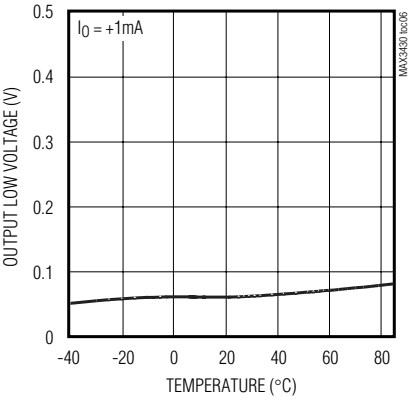

DRIVER OUTPUT CURRENT vs. DIFFERENTIAL OUTPUT VOLTAGE

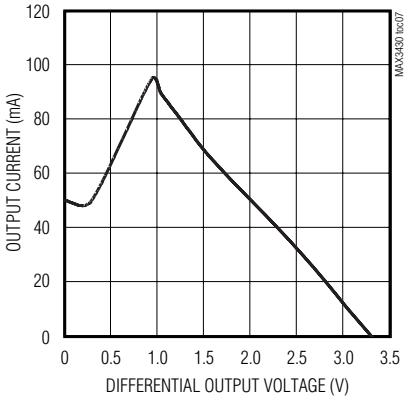

DRIVER DIFFERENTIAL OUTPUT VOLTAGE vs. TEMPERATURE

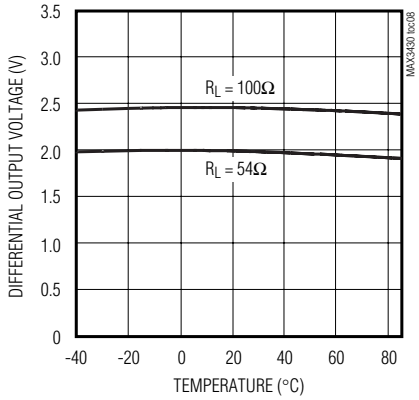

A, B CURRENT vs. A, B VOLTAGE (TO GROUND)

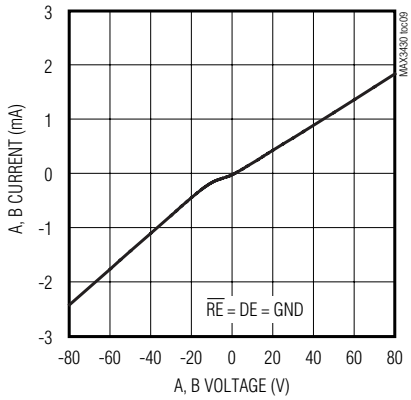

±80V Fault-Protected, Fail-Safe, 1/4-Unit Load, +3.3V RS-485 Transceiver

Test Circuits/Timing Diagrams

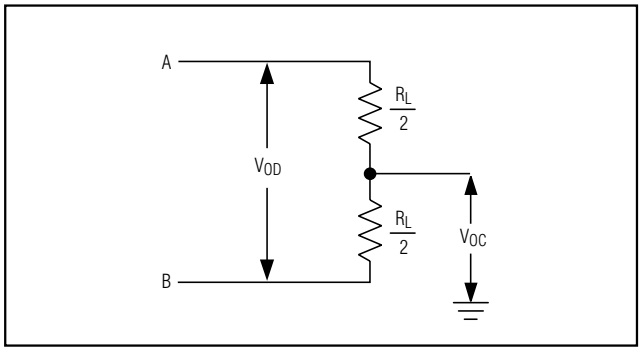

Figure 1. Driver DC Test Load

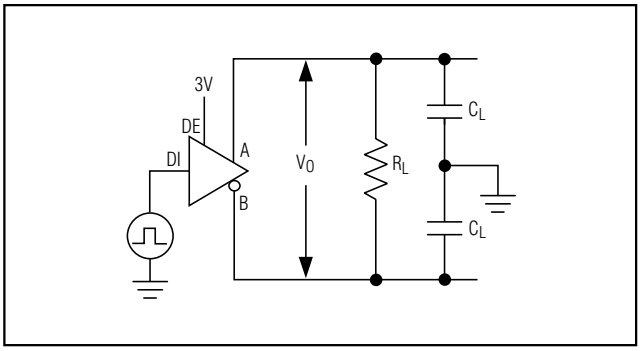

Figure 2. Driver Timing Test Circuit

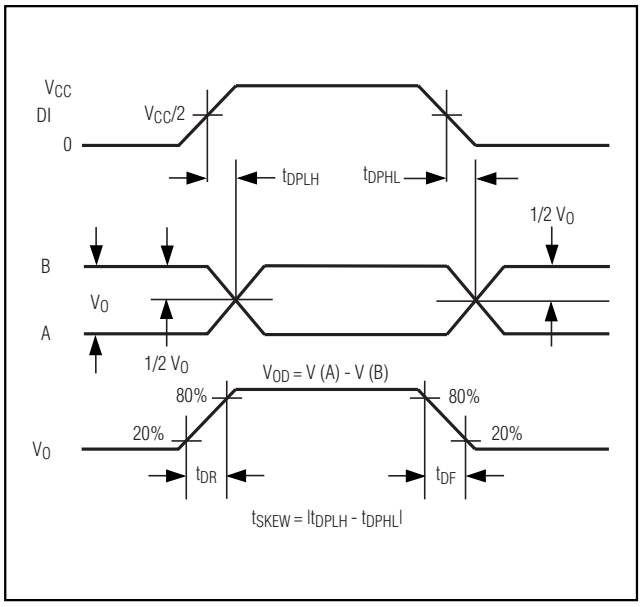

Figure 3. Driver Propagation Delays

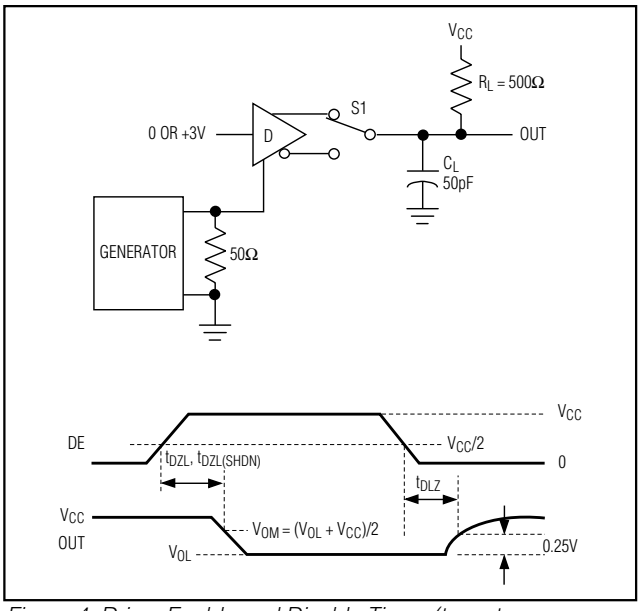

Figure 4. Driver Enable and Disable Times (t_{DZL}, t_{DLZ}, $t_{DLZ(SHDN)}$)

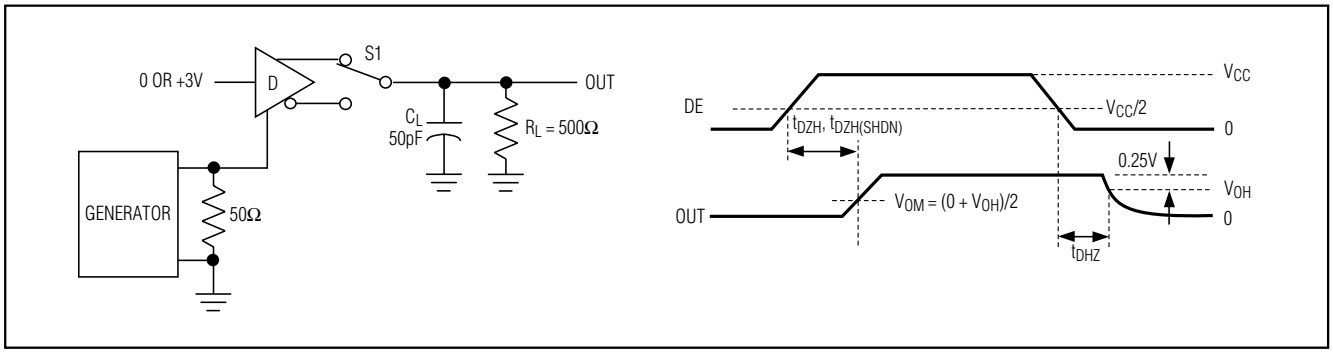

Figure 5. Driver Enable and Disable Times (t_{DHZ}, t_{DZH}, $t_{DZH(SHDN)}$)

Test Circuits/Timing Diagrams (continued)

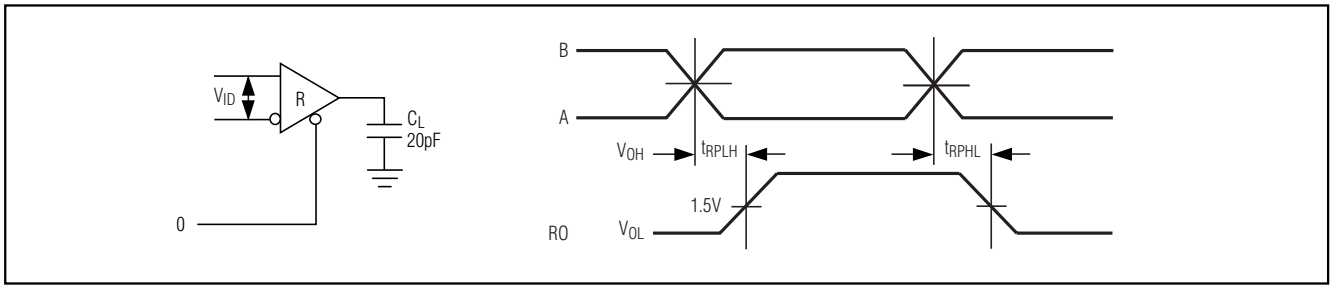

Figure 6. Receiver Propagation Delays

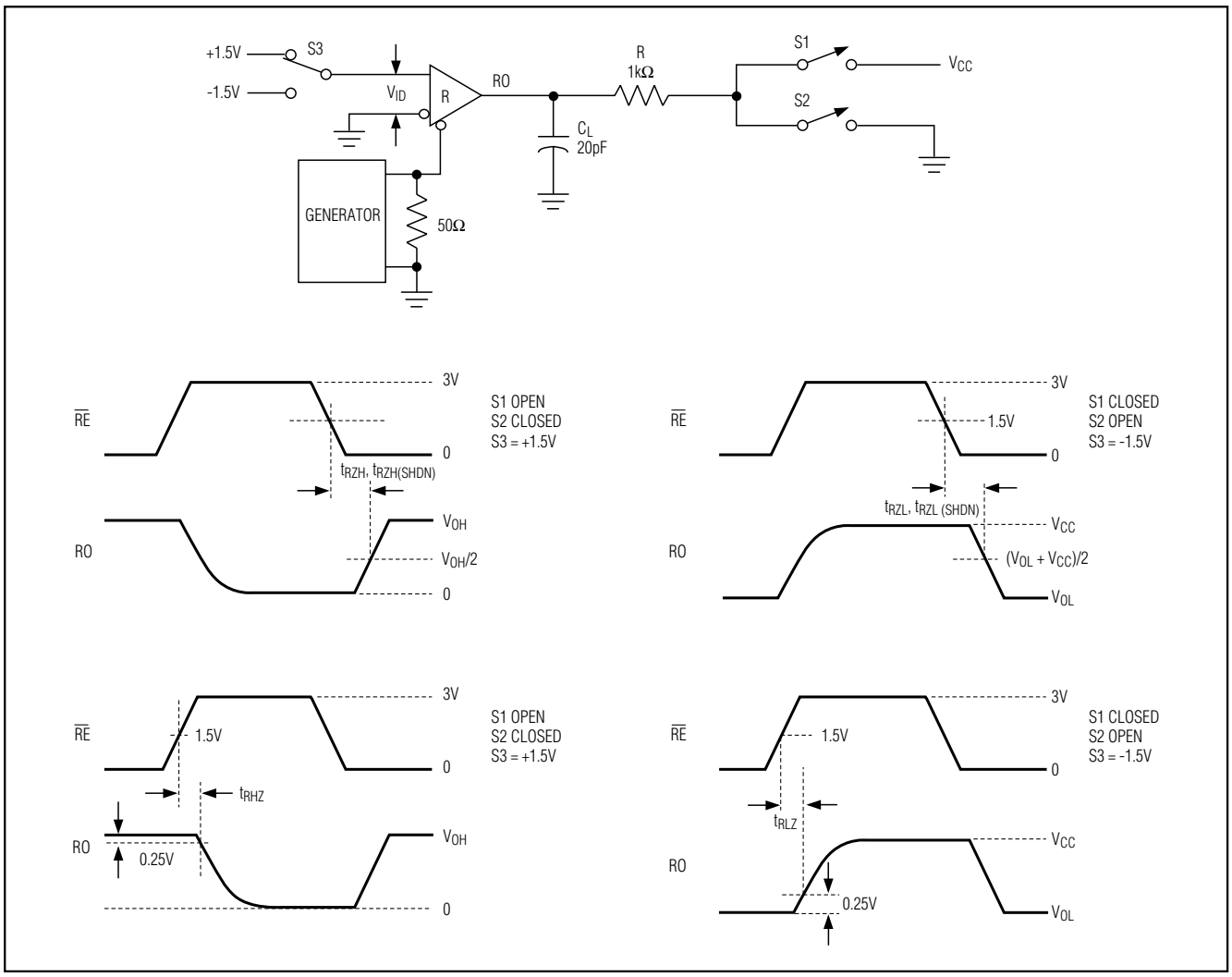

Figure 7. Receiver Enable and Disable Times

±80V Fault-Protected, Fail-Safe, 1/4-Unit Load, +3.3V RS-485 Transceiver

Pin Description

PIN	NAME	FUNCTION
1	RO	Receiver Output
2	$\overline{RE}$	Receiver Output Enable. RO is enabled when $\overline{RE}$ is low; RO is high impedance when $\overline{RE}$ is high. The device enters a low-power shutdown mode if $\overline{RE}$ is high and DE is low.
3	DE	Driver Output Enable. Driving DE high enables the driver outputs. Pulling DE low puts the driver outputs in a high-impedance state. If $\overline{RE}$ is high and DE is low, the device enters a low-power shutdown mode. If the driver outputs are enabled, the device functions as a line driver, and when they are high impedance it functions as a line receiver if $\overline{RE}$ is low.
4	DI	Driver Input. A logic low on DI forces output A low and output B high, while a logic high on DI forces output A high and output B low.
5	GND	Ground
6	A	Noninverting Receiver Input/Driver Output
7	B	Inverting Receiver Input/Driver Output
8	V_{CC}	Positive Supply, V_{CC} = +3.3V ±10%. Bypass V_{CC} to GND with a 0.1µF ceramic capacitor.

Function Tables

Table 1. Transmitting

INPUTS			OUTPUTS		MODE
$\overline{RE}$	DE	DI	B	A	
X	1	1	0	1	Normal
X	1	0	1	0	Normal
0	0	X	High-Z	High-Z	Normal
1	0	X	High-Z	High-Z	Shutdown

X = *Don't care.*

Table 2. Receiving

INPUTS			OUTPUTS	MODE
$\overline{RE}$	DE	(A - B)	RO	
0	0	≥ -50mV	1	Normal
0	0	≤ -200mV	0	Normal
0	0	Inputs open	1	Normal
1	0	X	High-Z	Shutdown

X = *Don't care.*

±80V Fault-Protected, Fail-Safe, 1/4-Unit Load, +3.3V RS-485 Transceiver

Detailed Description

Driver

The driver accepts a single-ended, logic-level input (DI) and transfers it to a differential, RS-485 level output (A and B). Driving DE high enables the driver, while pulling DE low places the driver outputs (A and B) into a high-impedance state.

Receiver

The receiver accepts a differential, RS-485 level input (A and B), and transfers it to a single-ended, logic-level output (RO). Pulling $\overline{RE}$ low enables the receiver, while driving $\overline{RE}$ high and DE low places the receiver inputs (A and B) into a high-impedance state.

Low-Power Shutdown

Force DE low and $\overline{RE}$ high to shut down the MAX3430. A time delay of 1µs prevents the device from accidentally entering shutdown due to logic skews when switching between transmit and receive modes. Holding DE low and $\overline{RE}$ high for at least 1ms guarantees that the MAX3430 enters shutdown. In shutdown, the device consumes 100µA supply current.

±80V Fault Protection

The driver outputs/receiver inputs of RS-485 devices in industrial network applications often experience voltage faults resulting from transients that exceed the -7V to +12V range specified in the EIA/TIA-485 standard. In these applications, ordinary RS-485 devices (typical absolute maximum ratings -8V to +12.5V) require costly external protection devices. To reduce system complexity and the need for external protection, the driver outputs/receiver inputs of the MAX3430 withstand voltage faults of up to ±80V with respect to ground without damage (see the *Absolute Maximum Ratings* section, Note 1). Protection is guaranteed regardless of whether the device is active, shut down, or without power.

True Fail-Safe

The MAX3430 uses a -50mV to -200mV differential input threshold to ensure true fail-safe receiver inputs. This threshold guarantees the receiver outputs a logic high for shorted, open, or idle data lines. The -50mV to -200mV threshold complies with the ±200mV threshold EIA/TIA-485 standard.

±12kV ESD Protection

As with all Maxim devices, ESD-protection structures are incorporated on all pins to protect against ESD encountered during handling and assembly. The MAX3430 receiver inputs/driver outputs (A, B) have extra protection against static electricity found in normal operation. Maxim's engineers have developed state-of-the-art structures to protect these pins against ±12kV ESD without damage. After an ESD event, the MAX3430 continues working without latchup.

ESD protection can be tested in several ways. The receiver inputs are characterized for protection up to ±12kV using the Human Body Model.

ESD Test Conditions

ESD performance depends on a number of conditions. Contact Maxim for a reliability report that documents test setup, methodology, and results.

Human Body Model

Figure 8a shows the Human Body Model, and Figure 8b shows the current waveform it generates when discharged into a low impedance. This model consists of a 100pF capacitor charged to the ESD voltage of interest, which is then discharged into the device through a 1.5kΩ resistor.

Driver Output Protection

Two mechanisms prevent excessive output current and power dissipation caused by faults or bus contention. The first, a foldback current limit on the driver output

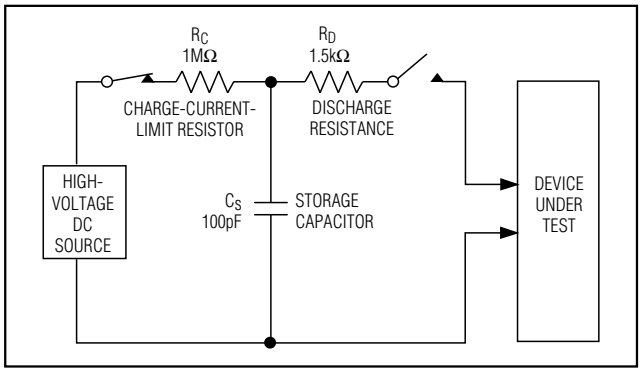

Figure 8a. Human Body ESD Test Model

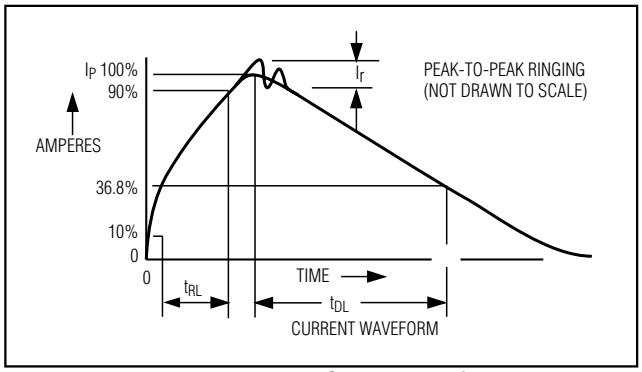

Figure 8b. Human Body Model Current Waveform

±80V Fault-Protected, Fail-Safe, 1/4-Unit Load, +3.3V RS-485 Transceiver

stage, provides immediate protection against short circuits over the whole common-mode voltage range. The second, a thermal shutdown circuit, forces the driver outputs into a high-impedance state if the die temperature exceeds +160°C. Normal operation resumes when the die temperature cools by +140°C, resulting in a pulsed output during continuous short-circuit conditions.

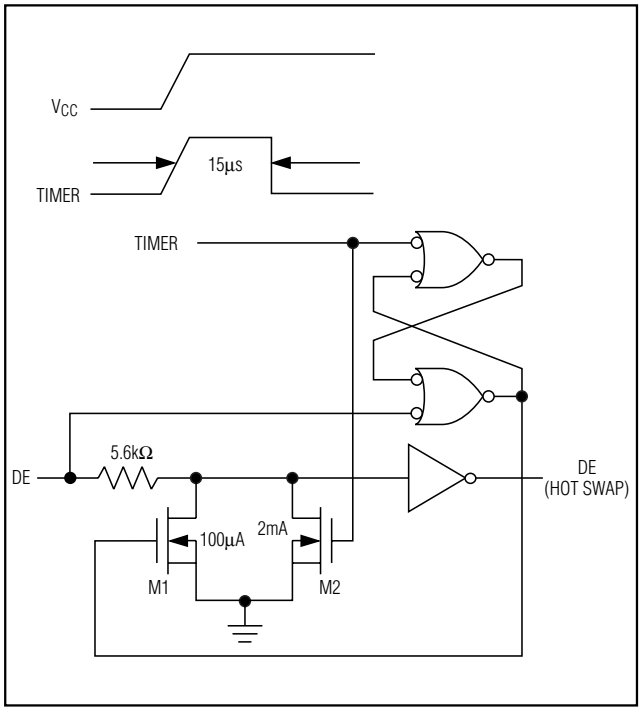

Figure 9. Simplified Structure of the Driver Enable Pin (DE)

Hot-Swap Capability

Hot-Swap Inputs

Inserting circuit boards into a hot, or powered backplane may cause voltage transients on DE, $\overline{RE}$, and receiver inputs A and B that can lead to data errors. For example, upon initial circuit board insertion, the processor undergoes a power-up sequence. During this period, the high-impedance state of the output drivers makes them unable to drive the MAX3430 enable inputs to a defined logic level. Meanwhile, leakage currents of up to 10µA from the high-impedance output, or capacitively coupled noise from V_{CC} or GND, could cause an input to drift to an incorrect logic state. To prevent such a condition from occurring, the MAX3430 features hot-swap input circuitry on DE to safeguard against unwanted driver activation during hot-swap situations. When V_{CC} rises, an internal pulldown circuit holds DE low for at least 10µs, and until the current into DE exceeds 200µA. After the initial power-up sequence, the pulldown circuit becomes transparent, resetting the hot-swap tolerable input.

Hot-Swap Input Circuitry

At the driver enable input (DE), there are two NMOS devices, M1 and M2 (Figure 9). When V_{CC} ramps from 0, an internal 15µs timer turns on M2 and sets the SR latch, which also turns on M1. Transistors M2, a 2mA current sink, and M1, a 100µA current sink, pull DE to GND through a 5.6kΩ resistor. M2 pulls DE to the disabled state against an external parasitic capacitance up to 100pF that may drive DE high. After 15µs, the timer deactivates M2 while M1 remains on, holding DE low against three-state leakage currents that may drive DE high. M1 remains on until an external current source overcomes the required input current. At this time, the SR latch resets M1 and turns off. When M1 turns off, DE reverts to a standard, high-impedance CMOS input. Whenever V_{CC} drops below 1V, the input is reset.

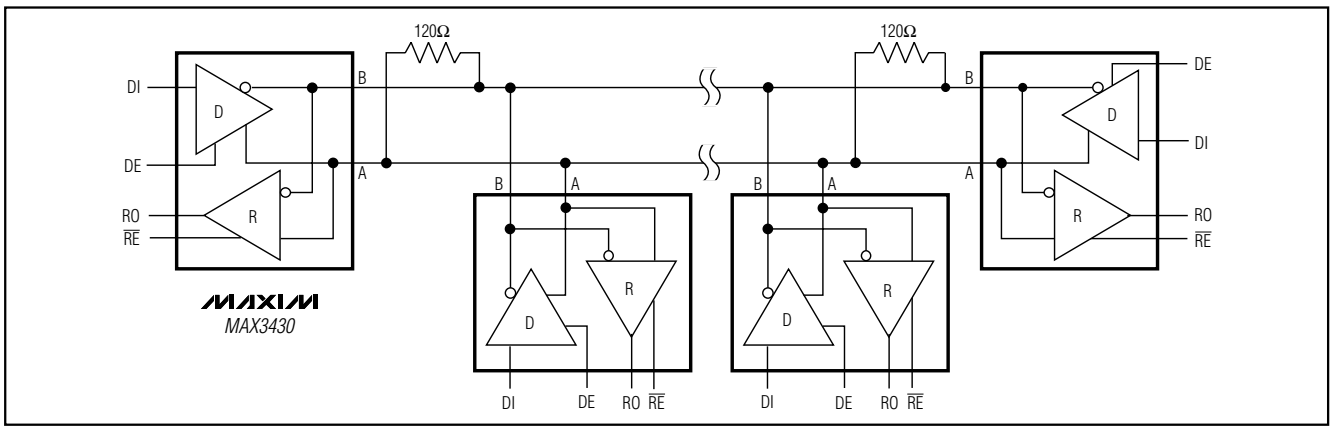

Figure 10. Typical RS-485 Network

Applications Information

128 Transceivers on the Bus

The standard RS-485 receiver input impedance is 12kΩ (one-unit load), and a standard driver can drive up to 32-unit loads. The MAX3430 transceiver 1/4-unit-load receiver input impedance (48kΩ) allows up to 128 transceivers connected in parallel on one communication line. Connect any combination of these devices, and/or other RS-485 devices, for a maximum of 32 unit loads to the line.

RS-485 Applications

The MAX3430 transceiver provides bidirectional data communications on multipoint bus transmission lines. Figure 10 shows a typical network applications circuit. The RS-485 standard covers line lengths up to 4000ft. The signal line must be terminated at both ends in its characteristic impedance, and stub lengths off the main line kept as short as possible.

Chip Information

TRANSISTOR COUNT: 300

PROCESS: BiCMOS

±80V Fault-Protected, Fail-Safe, 1/4-Unit Load, +3.3V RS-485 Transceiver

Package Information

(The package drawing(s) in this data sheet may not reflect the most current specifications. For the latest package outline information, go to **www.maxim-ic.com/packages**.)

SOICN .EPS

	INCHES		MILLIMETERS	
DIM	MIN	MAX	MIN	MAX
A	0.053	0.069	1.35	1.75
A1	0.004	0.010	0.10	0.25
B	0.014	0.019	0.35	0.49
C	0.007	0.010	0.19	0.25
e	0.050 BSC		1.27 BSC	
E	0.150	0.157	3.80	4.00
H	0.228	0.244	5.80	6.20
L	0.016	0.050	0.40	1.27

VARIATIONS:

	INCHES		MILLIMETERS			
DIM	MIN	MAX	MIN	MAX	N	MS012
D	0.189	0.197	4.80	5.00	8	AA
D	0.337	0.344	8.55	8.75	14	AB
D	0.386	0.394	9.80	10.00	16	AC

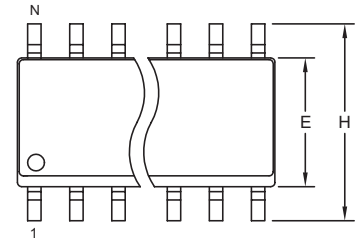

TOP VIEW

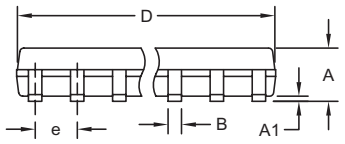

FRONT VIEW

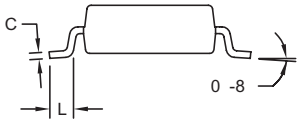

SIDE VIEW

NOTES:
1. D&E DO NOT INCLUDE MOLD FLASH.
2. MOLD FLASH OR PROTRUSIONS NOT TO EXCEED 0.15mm (.006").
3. LEADS TO BE COPLANAR WITHIN 0.10mm (.004").
4. CONTROLLING DIMENSION: MILLIMETERS.
5. MEETS JEDEC MS012.
6. N = NUMBER OF PINS.

DALLAS SEMICONDUCTOR MAXIM

PROPRIETARY INFORMATION

TITLE: PACKAGE OUTLINE, .150" SOIC

APPROVAL	DOCUMENT CONTROL NO.	REV.	
	21-0041	B	1/1

Package Information (continued)

(The package drawing(s) in this data sheet may not reflect the most current specifications. For the latest package outline information, go to **www.maxim-ic.com/packages**.)

PDIPN.EPS

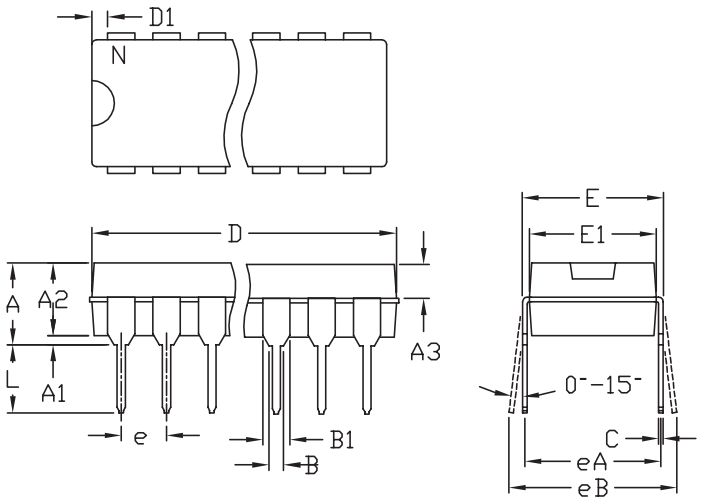

	INCHES		MILLIMETERS	
	MIN	MAX	MIN	MAX
A	---	0.180	---	4.572
A1	0.015	---	0.38	---
A2	0.125	0.175	3.18	4.45
A3	0.055	0.080	1.40	2.03
B	0.015	0.022	0.381	0.56
B1	0.045	0.065	1.14	1.65
C	0.008	0.014	0.2	0.355
D1	0.005	0.080	0.13	2.03
E	0.300	0.325	7.62	8.26
E1	0.240	0.310	6.10	7.87
e	0.100 BSC.		2.54 BSC.	
eA	0.300 BSC.		7.62 BSC.	
eB	0.400 BSC.		10.16 BSC.	
L	0.115	0.150	2.921	3.81

	INCHES		MILLIMETERS			
	MIN	MAX	MIN	MAX	N	MS001
D	0.348	0.390	8.84	9.91	8	AB
D	0.735	0.765	18.67	19.43	14	AC
D	0.745	0.765	18.92	19.43	16	AA
D	0.885	0.915	22.48	23.24	18	AD
D	1.015	1.045	25.78	26.54	20	AE
D	1.14	1.265	28.96	32.13	24	AF
D	1.360	1.380	34.54	35.05	28	*5

NOTES:
1. D&E DO NOT INCLUDE MOLD FLASH
2. MOLD FLASH OR PROTRUSIONS NOT TO EXCEED .15mm (.006")
3. CONTROLLING DIMENSION: MILLIMETER
4. MEETS JEDEC MS001-XX AS SHOWN IN ABOVE TABLE
5. SIMILIAR TO JEDEC MO-058AB
6. N = NUMBER OF PINS

MAXIM 120 SAN GABRIEL DR SUNNYVALE CA 94086 FAX (408) 737 7194 PROPRIETARY INFORMATION | PACKAGE FAMILY OUTLINE: PDIP .300" TITLE | 1/1 | 21-0043 D DOCUMENT CONTROL NUMBER REV

Maxim cannot assume responsibility for use of any circuitry other than circuitry entirely embodied in a Maxim product. No circuit patent licenses are implied. Maxim reserves the right to change the circuitry and specifications without notice at any time.

© 2003 Maxim Integrated Products Printed USA MAXIM is a registered trademark of Maxim Integrated Products.